LED Leko 2000 WW

USER MANUAL



---------- **2019** Ver04.01----------

INSTRUCTION

Thank you for purchasing Led Leko 2000 WW, every unit has been thoroughly tested and shipped in perfect condition. Carefully check the shipping carton for damage that may have occurred during shipping. If the carton appears to be damaged, carefully inspect your unit for any damage and be sure all accessories necessary to operate the unit has arrived well. In the case damage has been found or parts are missing, please contact the manufacturer or your dealer for further instructions. Do not return this unit to your dealer without pre-notice..

DESCRIPTION OF THE DEVICE

1. Profile

With the idea of energy saving and environment protection, the device use low power loss and extremely high efficiency led. The device housing cover is made of used the new high strength heat resistance engineering plastics, with beautiful shape and smooth lines. The designing and manufacturing is in compliance with the IEC standard. The device is suitable in the large-scale theatrical performance, the theater, the performance hall, the bar, nightclub and so on.

The product conforms to the international standard DMX512 agreement completely; the device can be controlled in signal, and also be controlled in many units.

2. **Drawing(mm)**

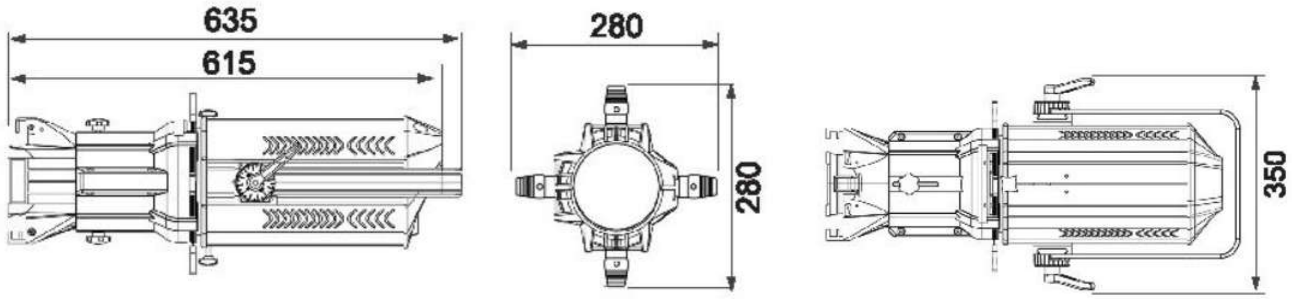

3.Specification

Model: LED Leko 2000 WW

Lamp: Japanese Citizen 200W 3200K LED X1pc
Power Supply: AC100V-250V, 50Hz/60Hz
Power consumption: 200W
Optic Lens: 19°
CRI>92
DMX Channel: 2CHs
LCD display
N. W.: 9kgs
G.W: 11kgs
Dimension: 280x635x350mm

4. Safety Precautions

- Be sure that the local power outlet match that of the required voltage for your unit,
- Do not attempt to operate this unit if the power cord has been frayed or broken. Do not attempt to remove or break off the ground prong from the electrical cord. This prong is used to reduce the risk of electrical shock and fire in case of an internal short.
- Disconnect from main power before making any type of connection.
- Do not remove the cover under any conditions. There are user serviceable parts inside.
- Never operate this unit when its rear cover is removed.
- Never plug this unit into a dimmer pack.

- Always be sure to mount this unit in an area that will allow proper ventilation. Allow about 6” (15cm) between this device and a wall.
- Do not attempt to operate this unit, if it becomes damaged.
- During long periods of non-use, disconnect the units main power.
- Always mount this unit in safe and stable matter.
- Power-supply cords should be routed so that they are not likely to be walked on or pinched by items placed upon or against them, paying particular attention to the point they exit from the unit.
- Cleaning unit should be cleaned only as recommended by the manufacturer. See ‘Cleaning” for details.
- Heat –The appliance should be situated away from heat sources such as radiators, heat registers, stoves, or other appliances (including amplifiers) that produce heat.
- The unit should be serviced by qualified service personnel when:

A. The power-supply cord or the plug has been damaged.
B. Objects have fallen, or liquid has been spilled into the appliance.
C. The appliance has been exposed to rain or water.
D. The appliance does not appear to operate normally or exhibits s marked change in performance.

5.Use gobo holder

- Take out the gobo holder, loosen the screws insert the gobos and lock the screws again.
- Insert the gobo in the slot.

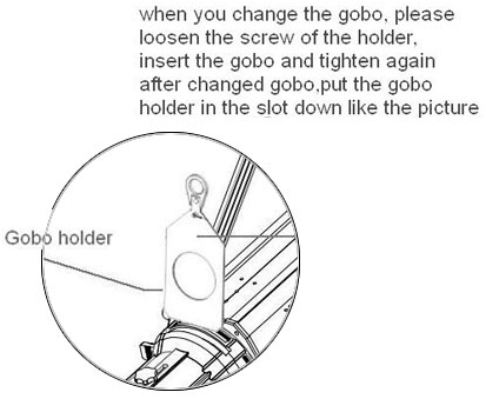

6.Use iris

The fixture delivers without Iris; user can purchase the iris if needed. Loose the screws and insert the iris.

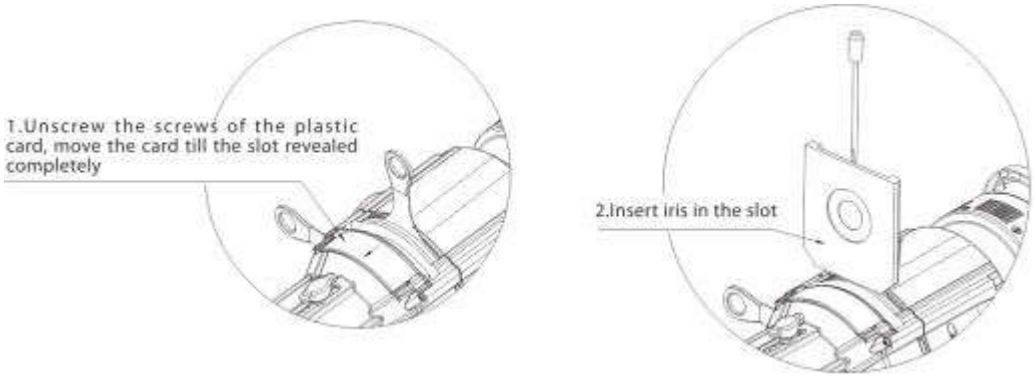

7.Replace fuse

- Before replacing the fuse, unplug mains lead.
- Procedure:

  Step1: Unscrew the fuse holder on the rear panel with a fitting screwdriver from the housing (Anti-clockwise).

Step2: Remove the old fuse from the fuse holder.

Step3: Install the new fuse in the fuse holder.

Step4: Replacing the fuse holder in the housing and fix it.

8.Focus

- The objective lens cylinder is usually shrieked before leave factory, after connect the projector to the mains, user may loose the screws and pull out the lens cylinder, till the white light output circular is clearly presented, locking tightly the two screws again.
- When the projection distance is changed, user can follow previous operation steps, and focus the projector.

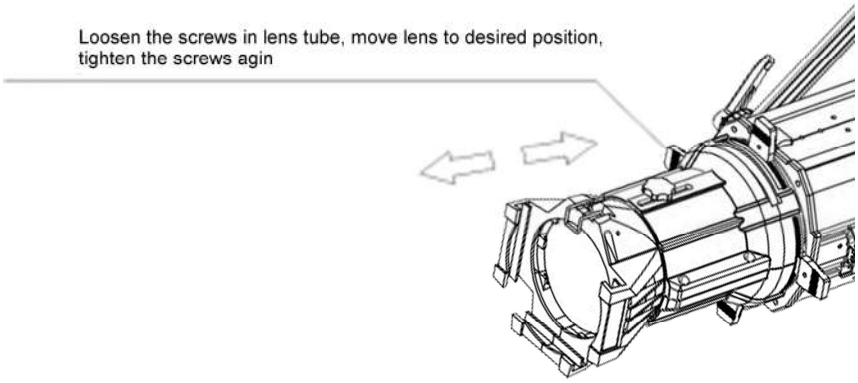

OPERATION

9.Control Board

- MODE
- UP
- DOWN
- ENTER

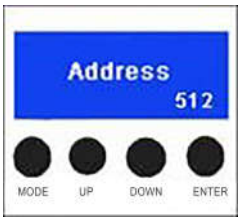

10.Menu Display

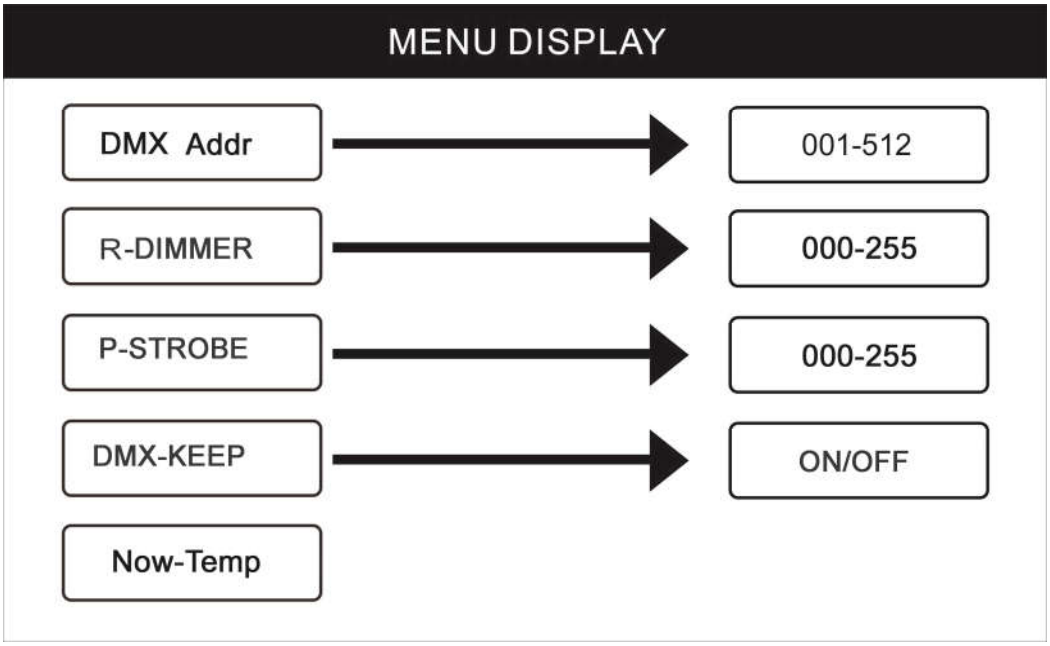

DMX Addr

DMX Address. Press Enter to select the start address channel. The first display will let you know what operation mode you are in. Use the Up/Down keys to select the desired start address. Press Enter to confirm.

R-DIMMER

Dimmer This function allows you select LED color intensity from 000-255, Press Enter to use Up/Down keys to select desired intensity settings. Press Enter to confirm the setting.

P-STROBE

STROBE Press Enter to control strobe effect, Press Enter to use Up/Down keys to select desired speed settings. Press Enter to confirm the setting.

DMX-KEEP

DMX KEEP This function allow you to set fixtures be dmx mode or disconnected dmx. Press Enter to confirm the setting

Now-Temp

Now-Temp This function issues current temperature of the fixture.

11.DMX Chart

Channel	Value	Function
1	000-255	Dimmer 0-100%
2	000-255	Strobe

12. APPENDIX

1. Issues and Solution

Issue	Reason	Solution
Device not work	No power	AC100V-250V, 50Hz/60Hz. Check the power connection, and make sure device connect the mains in well condition. Check if switch is on. Check if the fuse is good.
Led lamp OFF	Led lamp burnt	Replacing led bulb
	Driver stop working	Replacing led driver board
	Temperature switch broken	Replacing temperature switch
Fan not work	Fans broken	Replacing fans

2. Cleaning

Due to fog residue, smoke, and dust cleaning the internal and external optical lenses must be carried out periodically to optimize light output.

1. Use normal glass cleaner and a soft cloth to wipe off the outside casing.
2. Clean the external optics with glass cleaner and a soft cloth every 20 days.
3. Always be sure to dry all parts completely before plugging the unit back in.

Cleaning frequency depends on the environment in which the unit operates (i.e. smoke, fog residue, dust, dew).

3. Unit not responding to DMX:

1. Check that the DMX cables are connected properly and are wired correctly (pin 3 is “hot”; on Some other DMX devices pin 5 may be “hot”). Also, check that all cables are connected to the right connectors; It does matter which way the inputs and outputs are connected.